XS4F | Scheda Tecnica

LG Business Solutions

		55XS4F	49XS4F
PANEL	Screen Size	55"	49"
	Panel Technology	IPS, M+ (WRGB)	IPS, M+ (WRGB)
	Aspect Ratio	16 : 9	16 : 9
	Native Resolution	1,920 x 1,080 (FHD)	1,920 x 1,080 (FHD)
	Brightness	4,000 cd/m^2 (Typ.), 3,200 cd/m^2 (Min.)	4,000 cd/m^2 (Typ.), 3,200 cd/m^2 (Min.)
	Contrast Ratio (Typ.)	1,000:1	1,000:1
	Viewing Angle (H x V)	178 x 178	178 x 178
	Surface Treatment	Haze 3%, QWP	Haze 3%, QWP
	Lifetime	50,000 Hrs	50,000 Hrs
	Operation Hours	24 Hrs	24 Hrs
	Orientation	Landscape & Portrait	Landscape & Portrait
CONNECTIVITY	Input	HDMI (2), DP, DVI-D, Audio, USB	HDMI (2), DP, DVI-D, Audio, USB
	Output	DP, External Speaker (L/R)	DP, External Speaker (L/R)
	External Control	RS232C In/out, RJ45 In, IR Receiver In	RS232C In/out, RJ45 In, IR Receiver In
PHYSICAL SPECIFICATION	Bezel Color	Black	Black
	Bezel Width	12.0 mm (T/B), 9.9 mm (L/R)	9 mm (T/B), 6.5 mm (L/R)
	Monitor Dimensions (W x H x D)	1,235.5 x 709.4 x 85.4 mm	1,092.7 x 626.4 x 83.5 mm
	Weight (Head)	25.0 kg	20.5 kg
	Carton Dimensions (W x H x D)	1,344 x 215 x 820 mm	1,194 x 175 x 760 mm
	Packed Weight	30.2 kg	25 kg
	Handle	Yes (2ea)	Yes (2ea)
	VESA™ Standard Mount Interface	600 x 400 mm	600 x 400 mm
SPECIAL FEATURES		Internal Memory (8GB, System 4GB + Available 4GB), Wi-Fi Dongle Ready, Temperature Sensor, Auto Brightness Sensor, Smart Energy Saving, USB Auto Playback, Local Contents Scheduling, Content Sync (RS232C, Local Network), OSD Rotation, Content Rotation, Tile Mode (Up to 15x15), Firmware Update by Network, SNMP, ISM Mode, Control Manager, DPM, PM Mode, Wake on LAN, HDMI-CEC[1]	
ENVIRONMENTAL CONDITIONS	Operation Temperature[2]	0°C to 40°C	0°C to 40°C
	Operation Humidity	10% to 80%	10% to 80%
POWER	Power Type	Built-In Power	Built-In Power
	Power Supply	100-240 V~, 50/60 Hz	100-240 V~, 50/60Hz
	Power Consumption – Typ. / Max.	375 W / 400 W	345 W / 370 W
	Power Consumption – Smart Energy Saving	140 W	135 W
STANDARD (CERTIFICATION)	Safety	IEC 60950-1 / EN 60950-1 / UL 60950-1	IEC 60950-1 / EN 60950-1 / UL 60950-1
	EMC	FCC Class "A" / CE / KC / VCCI	FCC Class "A" / CE / KC / VCCI
	ErP / Energy Star	No / No	No / No
SOFTWARE COMPATIBILITY[3]	Content Management Software	SuperSign CMS	SuperSign CMS
	Control and Monitoring Software	SuperSign Control+	SuperSign Control+
ACCESSORIES	Basic	Remote Controller, Power Cord, HDMI Cable, Manual (ESG/EIG), IR Receiver (w/ Ambient Light Sensor)	Remote Controller, Power Cord, HDMI Cable, Manual (ESG/EIG), IR Receiver (w/ Ambient Light Sensor)
	Optional	Landscape Wall Mount (WM-L640V), Portrait Wall Mount (WM-P640V), Wi-Fi Dongle (AN-WF500)	Landscape Wall Mount (WM-L640V), Portrait Wall Mount (WM-P640V), Wi-Fi Dongle (AN-WF500)

1) Compatibility may differ by equipment. 2) Without direct sunlight or with cooling systems in direct sunlight. 3) Software compatibility may change over time. Please contact your regional LG sales representative for details.

Connessioni

55XS4F / 49XS4F

1. HDMI IN 1
2. HDMI IN 2
3. DP IN
4. DP OUT
5. DVI-D IN
6. USB IN
7. AUDIO IN (PC)
8. LAN

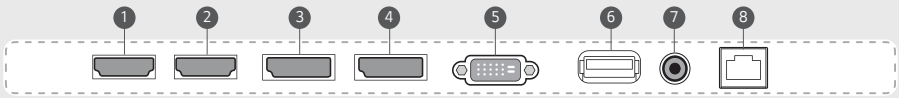

*I dati presenti in questa scheda tecnica sono soggetti a modifiche dovute ad aggiornamenti di prodotto. Vi invitiamo a consultare i manuali d'uso o il sito **www.lgbusiness.it** per verificare la congruità dei dati

XS4F | Disegno Tecnico

55”

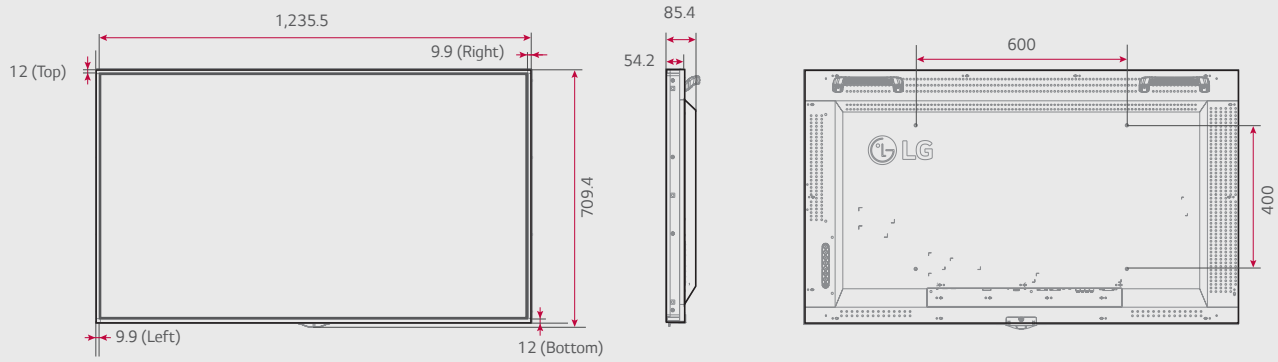
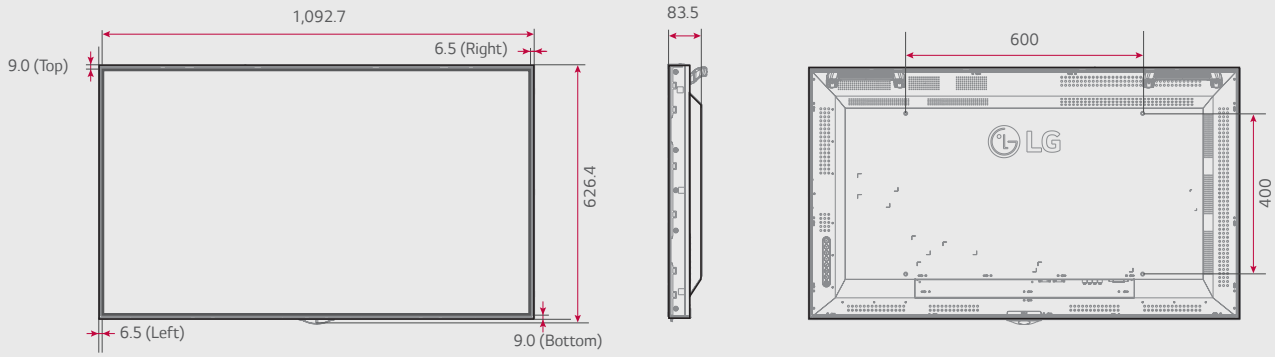
49”